DWG. NO. 900-185-977

RoHS

HOLDING BRAKE SPECIFICATIONS			
MOMENT OF INERTIA $GD^2/4$ ($kg \cdot m^2$)	HOLDING TORQUE ($N \cdot m$)	RATED VOLTAGE	CAPACITY (W)
2.2×10^{-4}	20	DC24V 0~+10%	10

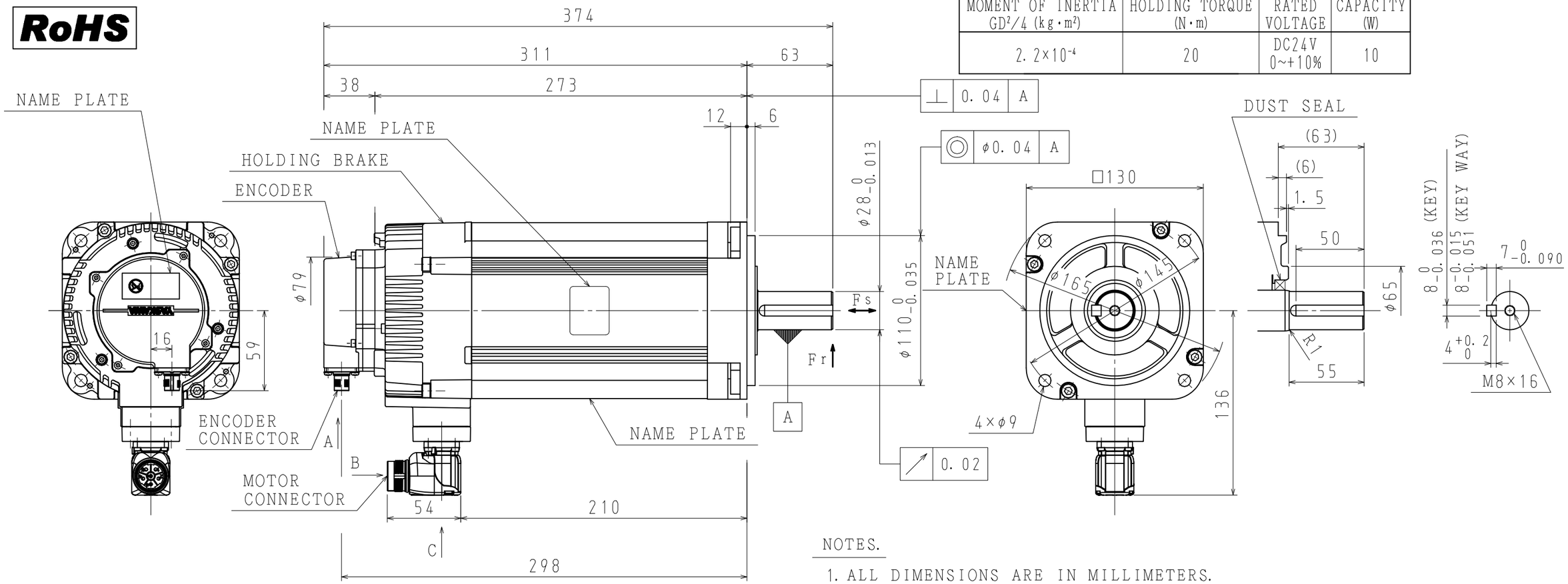

NOTES.

1. ALL DIMENSIONS ARE IN MILLIMETERS.
2. MOTOR SPECIFICATIONS :900-172-604
3. ENCODER SPECIFICATIONS:900-180-869 (24BIT INCREMENTAL)
4. HOLDING BRAKE CANNOT BE USED TO STOP MOTOR.
5. VIBRATION : 15μm OR BELOW AT RATED SPEED.
6. PLUGS AND CABLE CLAMPS ARE OPTIONAL.
7. READ AND UNDERSTAND DOCUMENT PACKED WITH MOTOR (SAFETY PRECAUTIONS), AND BE CAREFUL USING MOTOR.
8. DEGREES OF PROTECTION:IP67 EXCEPT FOR SHAFT OPENING. MUST USE SPECIFIED CONNECTORS FOR MOTOR.
9. DO NOT TOUCH EACH OF CONNECTOR PINS DIRECTLY. IT CAUSE FAILURE.
10. IN CASE OF MOUNTING THIS MOTOR HORIZONTAL, TO PLACE THE CONNECTOR DOWN IS RECOMMENDABLE.
11. USE HEXAGON SOCKET HEAD CAP SCREWS FOR MOUNTING MOTOR.
12. MOTOR CONNECTOR COULD BE TURNED IN THE RANGE OF ☆ WITHIN 10 TIMES.

ENCODER TERMINAL CONNECTION

1	PG5V
2	PG0V
3	FRAME GROUND
4	-
5	-
6	DATA (+)
7	DATA (-)
8	-
CON. CASE	FRAME GROUND

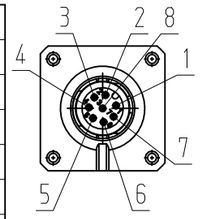

VIEW A

RECEPTACLE SIZE:M12

HOUSING:SACC-MSQ-M12MS-25-3, 2 SCO

MAKER:PHOENIX CONTACT

MOTOR TERMINAL CONNECTION

1	PHASE V
2	BRAKE
4	BRAKE
5	PHASE U
6	PHASE W
FG	FRAME GROUND
CON. CASE	FRAME GROUND

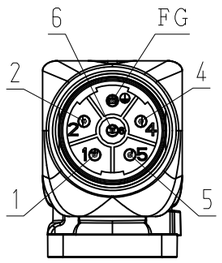

VIEW B

RECEPTACLE SIZE:M23

HOUSING:SF-5EP1N8AAD00S

MAKER:PHOENIX CONTACT

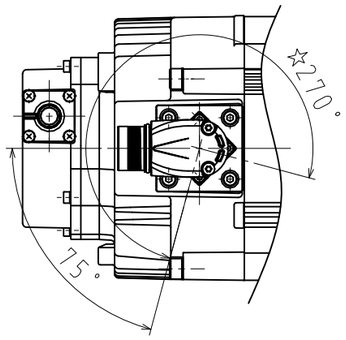

VIEW C

TYPE	RATED OUTPUT kW	RATED TORQUE N·m	TIME RATING	RATED SPEED min^{-1}	VOLTAGE Vrms	RATED CURRENT Arms	THERMAL CLASS	WEIGHT kg	ALLOWABLE RADIAL LOAD Fr N	ALLOWABLE THRUST LOAD Fs N
SGM7A-50DFF6H	5.0	15.8	CONT.	3000	400 (3PHASE)	13.8	F	19.5	1176 (AT SHAFT END)	392

SCALE 1:3

YASKAWA

DRWN	M. MURAKI
CHKD	T. HIROSE
APPV	K. AOKI

TITLE AC SERVOMOTOR Σ-7 SERIES

SGM7A MODEL 5.0kW

DRWN. DATE Dec. 01.'15

DWG. NO. 900-185-977

REV. ◇

SIZE A3