DWG. NO. 900-181-053

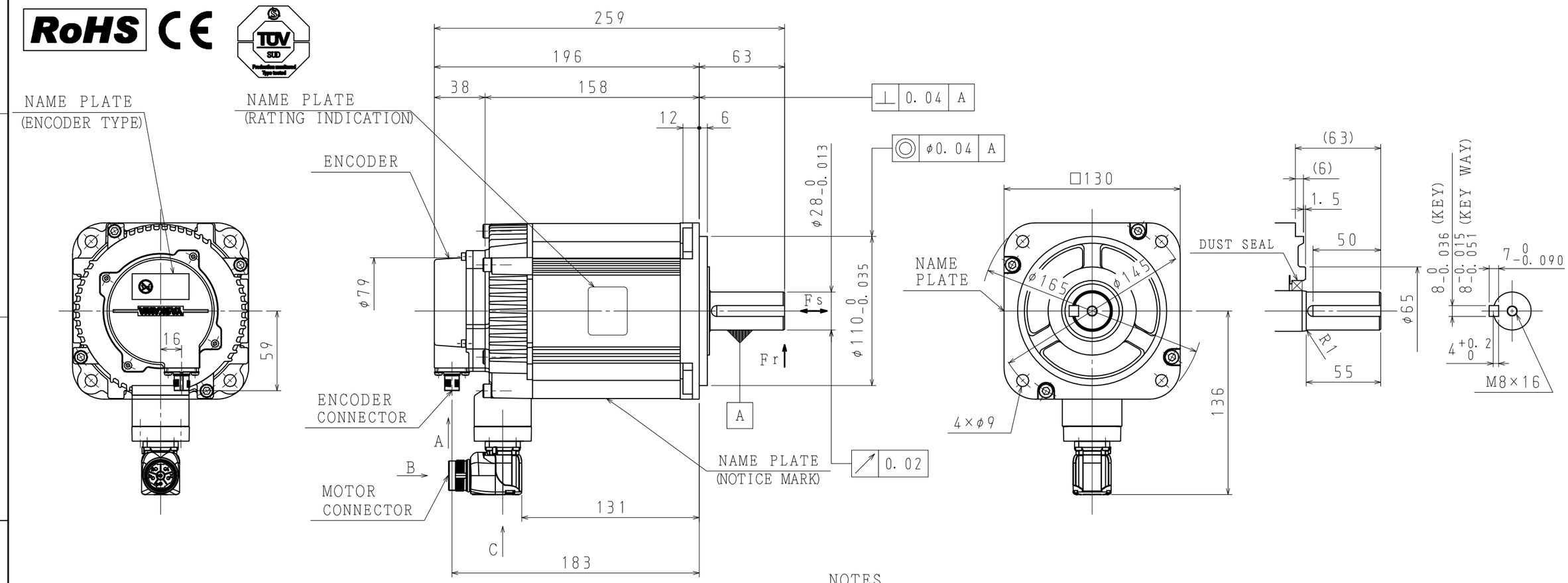

ENCODER TERMINAL CONNECTION

1	PG5V
2	PG0V
3	FRAME GROUND
4	BAT (+)
5	BAT (-)
6	DATA (+)
7	DATA (-)
8	-
CON. CASE	FRAME GROUND

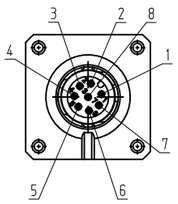

VIEW A

RECEPTACLE SIZE:M12
HOUSING:SACC-MSQ-M12MS-25-3, 2 SCO
MAKER:PHOENIX CONTACT

MOTOR TERMINAL CONNECTION

1	PHASE V
2	-
4	-
5	PHASE U
6	PHASE W
FG	FRAME GROUND
CON. CASE	FRAME GROUND

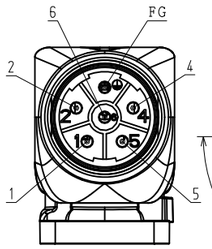

VIEW B

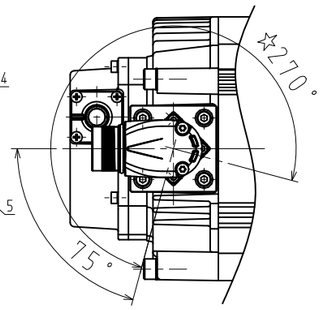

VIEW C

RECEPTACLE SIZE:M23
HOUSING:SF-5EP1N8AAD00S
MAKER:PHOENIX CONTACT

NOTES.

1. ALL DIMENSIONS ARE IN MILLIMETERS.
2. MOTOR SPECIFICATIONS :900-172-604
3. ENCODER SPECIFICATIONS:900-172-503 (24BIT ABSOLUTE)
4. VIBRATION : 15μm OR BELOW AT RATED SPEED.
5. PLUGS AND CABLE CLAMPS ARE OPTIONAL.
6. READ AND UNDERSTAND DOCUMENT PACKED WITH MOTOR (SAFETY PRECAUTIONS), AND BE CAREFUL USING MOTOR.
7. DEGREES OF PROTECTION:IP67 EXCEPT FOR SHAFT OPENING.
8. DO NOT TOUCH EACH OF CONNECTOR PINS DIRECTLY. IT CAUSE FAILURE.
9. IN CASE OF MOUNTING THIS MOTOR HORIZONTAL, TO PLACE THE CONNECTOR DOWN IS RECOMMENDABLE.
10. USE HEXAGON SOCKET HEAD CAP SCREWS FOR MOUNTING MOTOR.
11. MOTOR CONNECTOR COULD BE TURNED IN THE RANGE OF ☆ WITHIN 10 TIMES.

TYPE	RATED OUTPUT kW	RATED TORQUE N·m	TIME RATING	RATED SPEED min⁻¹	VOLTAGE Vrms	RATED CURRENT Arms	THERMAL CLASS	WEIGHT kg	ALLOWABLE RADIAL LOAD Fr N	ALLOWABLE THRUST LOAD Fs N
SGM7A-30D7F6F	3.0	9.8	CONT.	3000	400 (3PHASE)	8.9	F	10.6	980 (AT SHAFT END)	392

SCALE 1:3	YASKAWA	DRWN. H. KATO	TITLE AC SERVOMOTOR Σ-7 SERIES
		CHKD. T. HIROSE	SGM7A MODEL 3.0kW
		APRV. K. AOKI	

DRWN. DATE July. 01' 15
DWG. NO. 900-181-053
REV. ◇
SIZE A3