DWG.NO. HW0390154

*2: Each flange has a cable through hole.
When mounting equipment such as an attachment, ensure that no foreign objects including liquid, oil, or dust go into the hole.

*3: When 80 dia. part is used, pay attention to the screw & plug for T-axis grease replenishment.

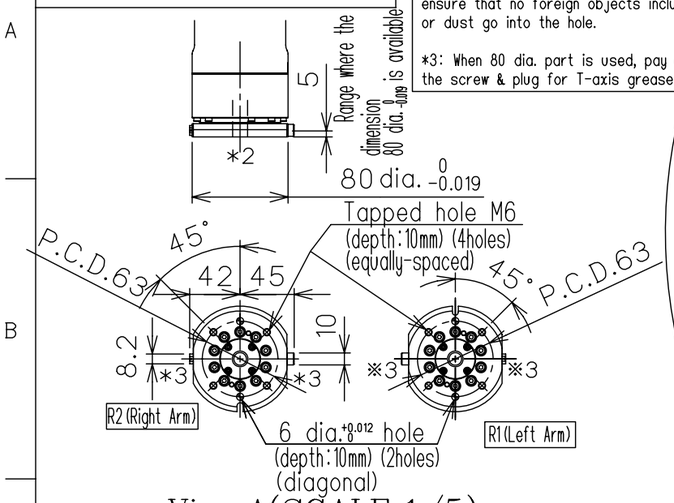

ViewA(SCALE 1/5)

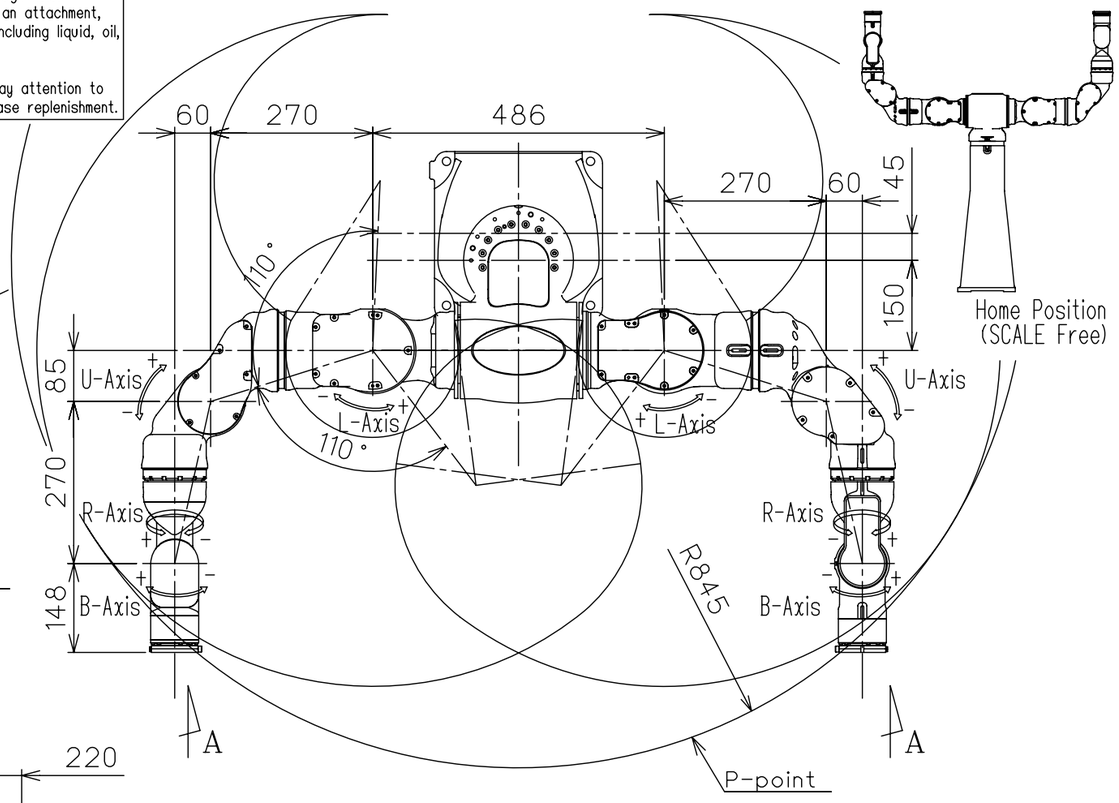

Item \ Model		MOTOMAN-SDA5D,SDA5F
Configuration		Articulated
Degree of Freedom		7 axes for the left arm (R1) ; 7 axes for the right arm (R2) ;1 turning axis
Payload		5kg/arm
Repetitive Positioning Accuracy *1		±0.06mm
Range of Motion	Rotation-axis	−170° − +170°
	S-axis (lifting)	−90° − +270°
	L-axis (lower arm)	−110° − +110°
	E-axis (lower arm twist)	−170° − +170°
	U-axis (upper arm)	−90° − +115°
	R-axis (upper arm twist)	−180° − +180°
	B-axis (wrist pitch/yaw)	−110° − +110°
	T-axis (wrist twist)	−180° − +180°
Maximum Speed	Rotation-axis	3.14rad/s (180°/s)
	S-axis	3.49rad/s (200°/s)
	L-axis	3.49rad/s (200°/s)
	E-axis	3.49rad/s (200°/s)
	U-axis	3.49rad/s (200°/s)
	R-axis	3.49rad/s (200°/s)
	B-axis	4.01rad/s (230°/s)
	T-axis	6.11rad/s (350°/s)
Allowable Moment	R-axis	14.7 N•m (1.5kgf•m)
	B-axis	14.7 N•m (1.5kgf•m)
	T-axis	7.35 N•m (0.75kgf•m)
Allowable Inertia ($GD^2/4$)	R-axis	0.45 kg•m²
	B-axis	0.45 kg•m²
	T-axis	0.11 kg•m²
Mass		110 kg
Ambient Conditions	Temperature	0 − 40℃
	Humidity	20−80%RH at constant temperature
	Vibration acceleration	Less than 4.9m/s² (0.5G)
	Others	•Free from corrosive gas or liquid, or explosive gas •Free from exposure to water,oil,or dust •Free from excessive electrical noise (plasma)
	Power Capacity	1.4 KVA

*1: Conformed to ISO9283
SI units are used in this table. However, gravitational unit is used in ( ).

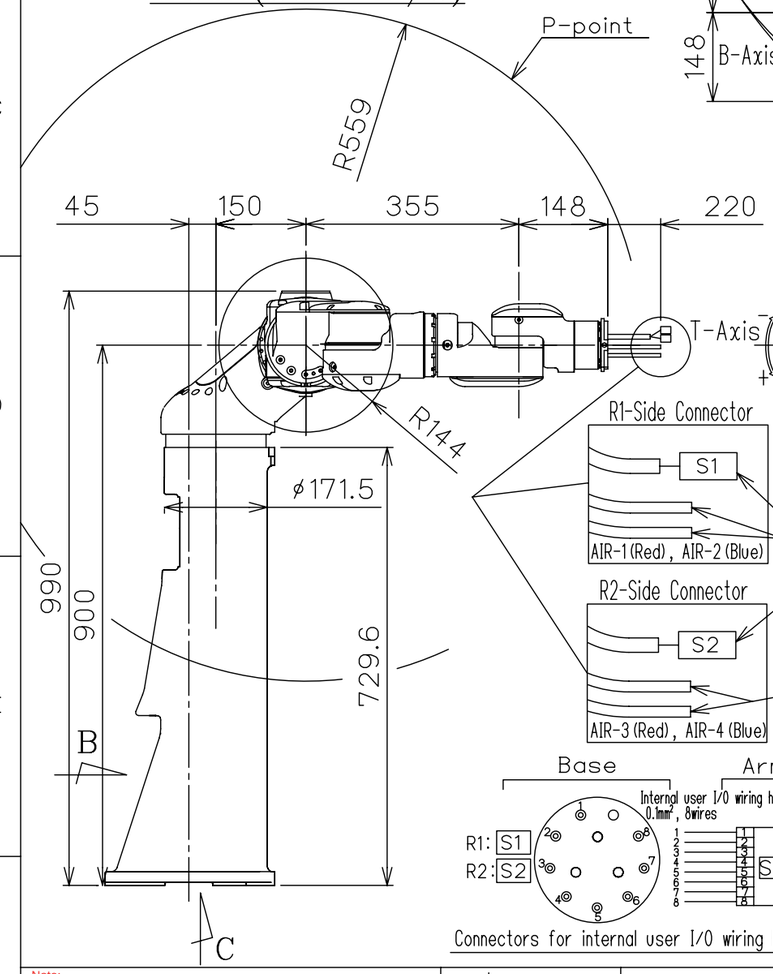

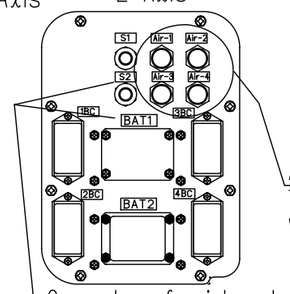

Air inlet (4 inlets):
Tapped hole PT3/8
with a pipe plug

Connectors for internal user I/O wiring harness:
LF10WBRB-12P (Pin Connector) (2 connectors)
Prepare socket connector:LF10WBP-12S *HIROSE*

ViewB (SCALE 1/5)

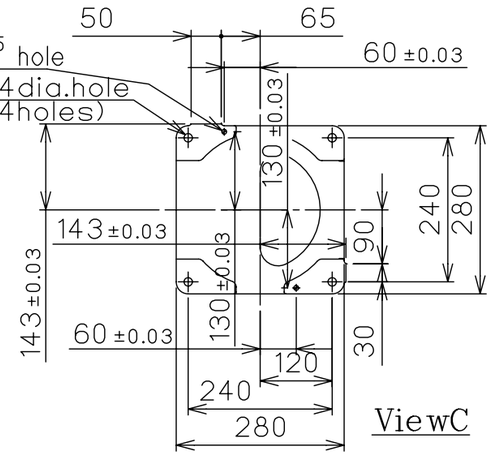

ViewC

This drawing is applicable with following type

Type	Note
YR-SDA005D-A00,A01	Standard•DX100
YR-SDA005F-A00	Standard•FS100

Note:
1. All rights reserved.
2. Please note that the data is subject to be deleted without advance notice.
3. No warranty is given in relation to the data including the specification.
4. We are not responsible for any damages or loss caused by the use of the data.

SCALE 1 : 10

YASKAWA
株式会社 安川電機

Reference Drawing

TITLE MOTOMAN-SDA5D,SDA5F
DIMENSION DIAGRAM

DWG.NO. HW0390154

5

SIZE A3